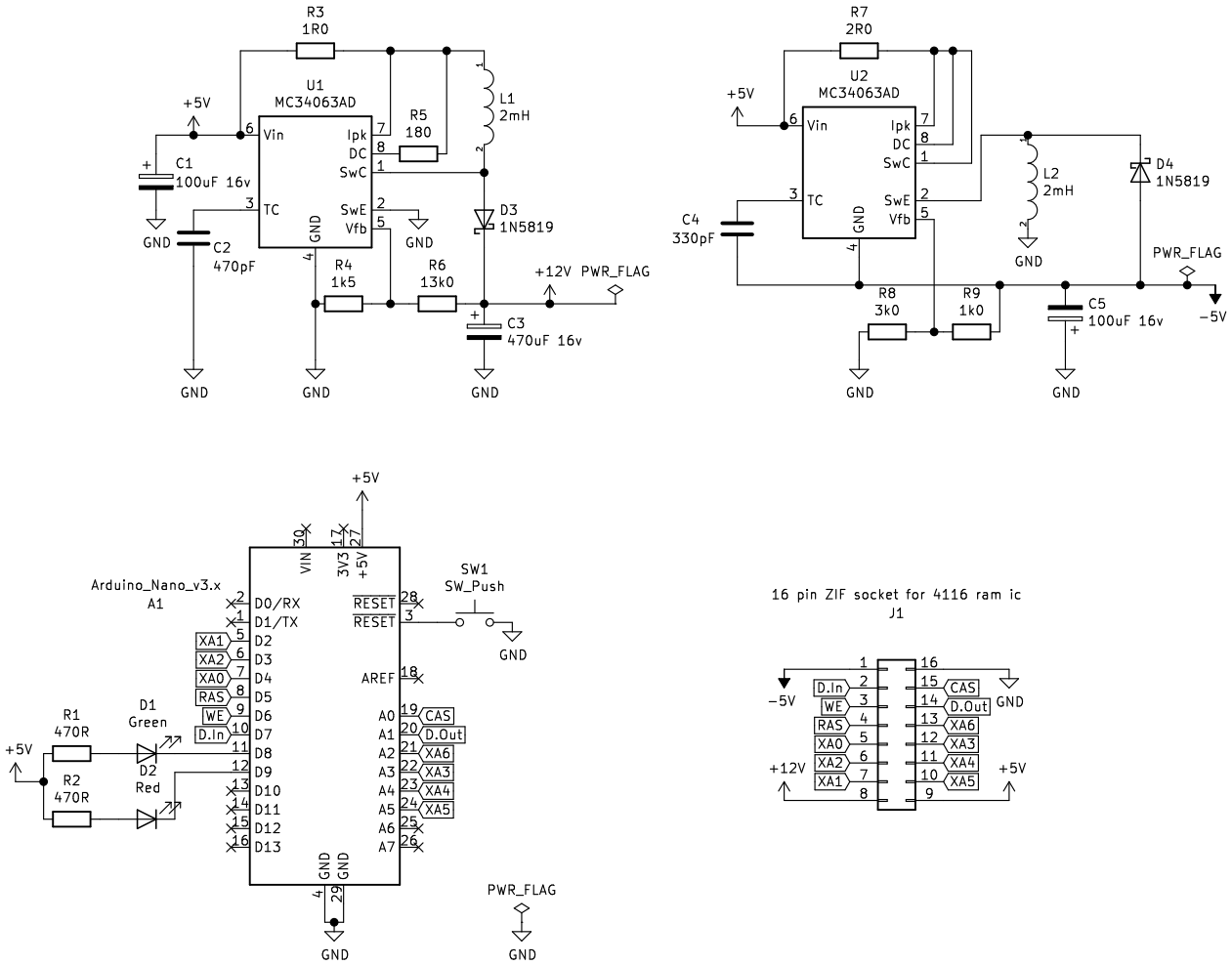

Powered from the micro USB on the Arduino nano.

Rev 2: Error in inverting DC curcuit. Corrected.
Reference for DC converters: https://www.onsemi.com/pub/Collateral/MC34063A-D.PDF

labs.frostbox.net
Frostbox Labs

Sheet: /
File: 4116 tester ulh.sch

Title: 4116 D ram tester rev2

Size: A4	Date:	**Rev:**
KiCad E.D.A. kicad (5.1.5-0-10_14)		Id: 1/1